TECHSOFT

DESKTOP ENGRAVER

TS-30

Manufactured By Roland DG Corporation

User's Manual

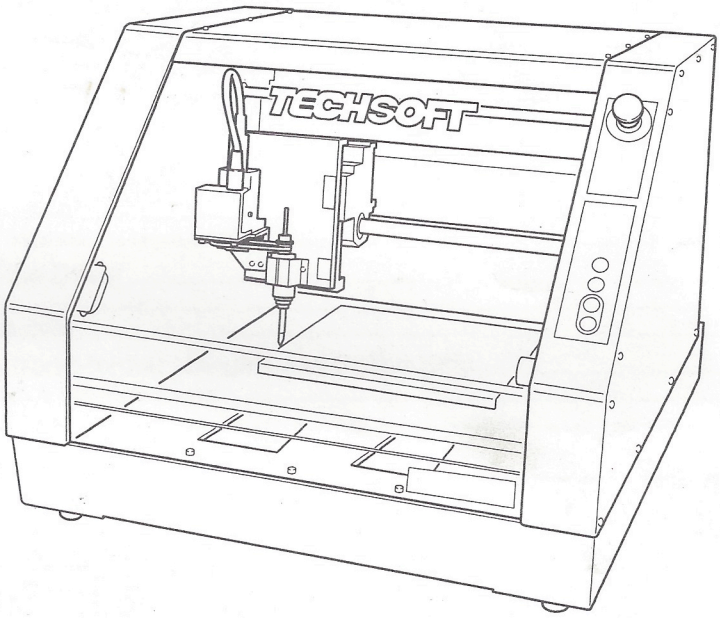

Thank you very much for purchasing this product.

- To ensure correct and safe usage with a full understanding of this product's performance, please be sure to read through this manual completely and store it in a safe location.
- Unauthorized copying or transferral, in whole or in part, of this manual is prohibited.
- The contents of this operation manual and the specifications of this product are subject to change without notice.
- The operation manual and the product have been prepared and tested as much as possible. If you find any misprint or error, please inform us.
- Roland DG Corp. assumes no responsibility for any direct or indirect loss or damage which may occur through use of this product, regardless of any failure to perform on the part of this product.
- Roland DG Corp. assumes no responsibility for any direct or indirect loss or damage which may occur with respect to any article made using this product.

ROLAND DG CORPORATION
1-6-4 Shinmiyakoda, Hamamatsu-shi, Shizuoka-ken, JAPAN 431-2103
MODEL NAME : See the MODEL given on the rating plate.
RELEVANT DIRECTIVE : EC MACHINERY DIRECTIVE (98/37/EC)
EC LOW VOLTAGE DIRECTIVE (73/23/EEC)
EC ELECTROMAGNETIC COMPATIBILITY DIRECTIVE (89/336/EEC)

WARNING

This is a Class A product. In a domestic environment this product may cause radio interference in which case the user may be required to take adequate measures.

Table of Contents

http://www.rolanddg.com/

What's the TS-30?

Features

This is an engraving machine that is operated by a computer. It can receive cutting data from your computer, and engrave text and shapes.
The front cover is equipped with an interlock for outstanding safety.

The Included Programs

You can use the included programs to create and output cutting data. For information on how to operate the programs, refer to the electronic-format manuals or the online help.

To Ensure Safe Use

About ⚠WARNING and ⚠CAUTION Notices

⚠WARNING	Used for instructions intended to alert the user to the risk of death or severe injury should the unit be used improperly.
⚠CAUTION	Used for instructions intended to alert the user to the risk of injury or material damage should the unit be used improperly. * Material damage refers to damage or other adverse effects caused with respect to the home and all its furnishings, as well to domestic animals or pets.

About the Symbols

	The △ symbol alerts the user to important instructions or warnings. The specific meaning of the symbol is determined by the design contained within the triangle. The symbol at left means "danger of electrocution."
	The ⃠ symbol alerts the user to items that must never be carried out (are forbidden). The specific thing that must not be done is indicated by the design contained within the circle. The symbol at left means the unit must never be disassembled.
	The ● symbol alerts the user to things that must be carried out. The specific thing that must be done is indicated by the design contained within the circle. The symbol at left means the power-cord plug must be unplugged from the outlet.

⚠WARNING

Do not disassemble, repair, or modify.
Doing so may lead to fire or abnormal operation resulting in injury.

Ground the unit with the ground wire.
Failure to do so may result in risk of electrocution in the event of a mechanical problem.

Do not use with any electrical power supply that does not meet the ratings displayed on the unit.
Use with any other power supply may lead to fire or electrocution.

Do not use while in an abnormal state (i.e., emitting smoke, burning odor, unusual noise, or the like).
Doing so may result in fire or electrocution. Immediately switch off the power, unplug the power cord from the electrical outlet, and contact your authorized Roland DG Corp. dealer or service center.

Use only with the power cord included with this product.
Use with other than the included power cord may lead to fire or electrocution.

Do not connect the power cord with other electrical loads on a single electrical outlet.
Doing so may generate heat and cause fire.

⚠CAUTION

Do not use with a damaged power cord or plug, or with a loose electrical outlet.

Doing so may lead to fire, electrical shock, or electrocution.

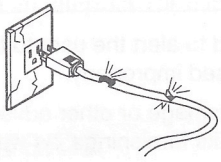

Do not damage or modify the electrical power cord, subject it to excessive bending, twisting, pulling, binding, or pinching, or place any object or weight on it.

Doing so may damage the electrical power cord, leading to fire, electrical shock, or electrocution.

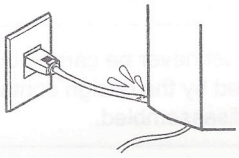

When not in use for extended periods, unplug the power-cord plug from the electrical outlet.

Failure to do so may result in danger of electrical shock, electrocution, or fire due to deterioration of electrical insulation.

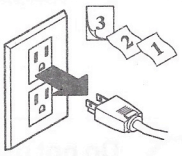

When unplugging the electrical power cord from the power outlet, grasp the plug, not the cord.

Unplugging by pulling the cord may damage it, leading to fire, electrical shock, or electrocution.

Do not attempt to unplug the power-cord plug with wet hands.

Doing so may result in electrical shock or electrocution.

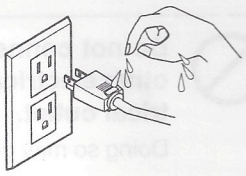

Do not allow liquids, metal objects or flammables inside the machine.

Such materials can cause fire.

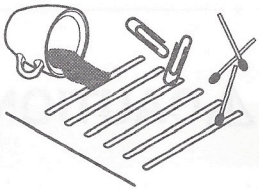

Install on a stable surface.

Failure to do so may result in the unit tipping over, leading to injury.

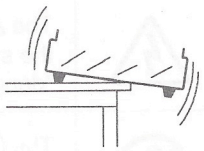

Perform dry cutting with no cutting oil.

Such materials can cause fire.

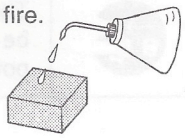

When you're finished, wash your hands to rinse away all cuttings.

Do not use any blower like airbrush to remove cutting dust.

Failure to do so may harm your health due to spread cutting dust in the air.

⚠CAUTION

Cutting dust which presents danger of explosion clear away by using a commercially available brush.

Attempting to use a vacuum cleaner to take up such cuttings may cause fire in the vacuum cleaner.

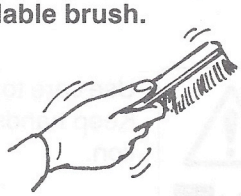

Unpacking, installation, and moving are operations that must be carried out by four or more persons.

Failure to do so may result in falling of the unit, leading to injury.

Switch off the machine and unplug the power cord from the electrical outlet before performing cleaning or maintenance.

Failure to do so may result in injury or electrical shock.

Do not touch the tool immediately after cutting operating stops.

The tool may have become hot due to friction heat and may cause burns if touched.

Do not touch the spindle motor immediately after a cutting operation has ended.

Doing so may result in burns.

Do not operate if a front cover is cracked or broken.

Failure to do so may result in injury. If the front cover is cracked, contact a service agent immediately for repairs.

About the Labels Affixed to the Unit

These labels are affixed to the body of this product.
The following figure describes the location and content of these messages.

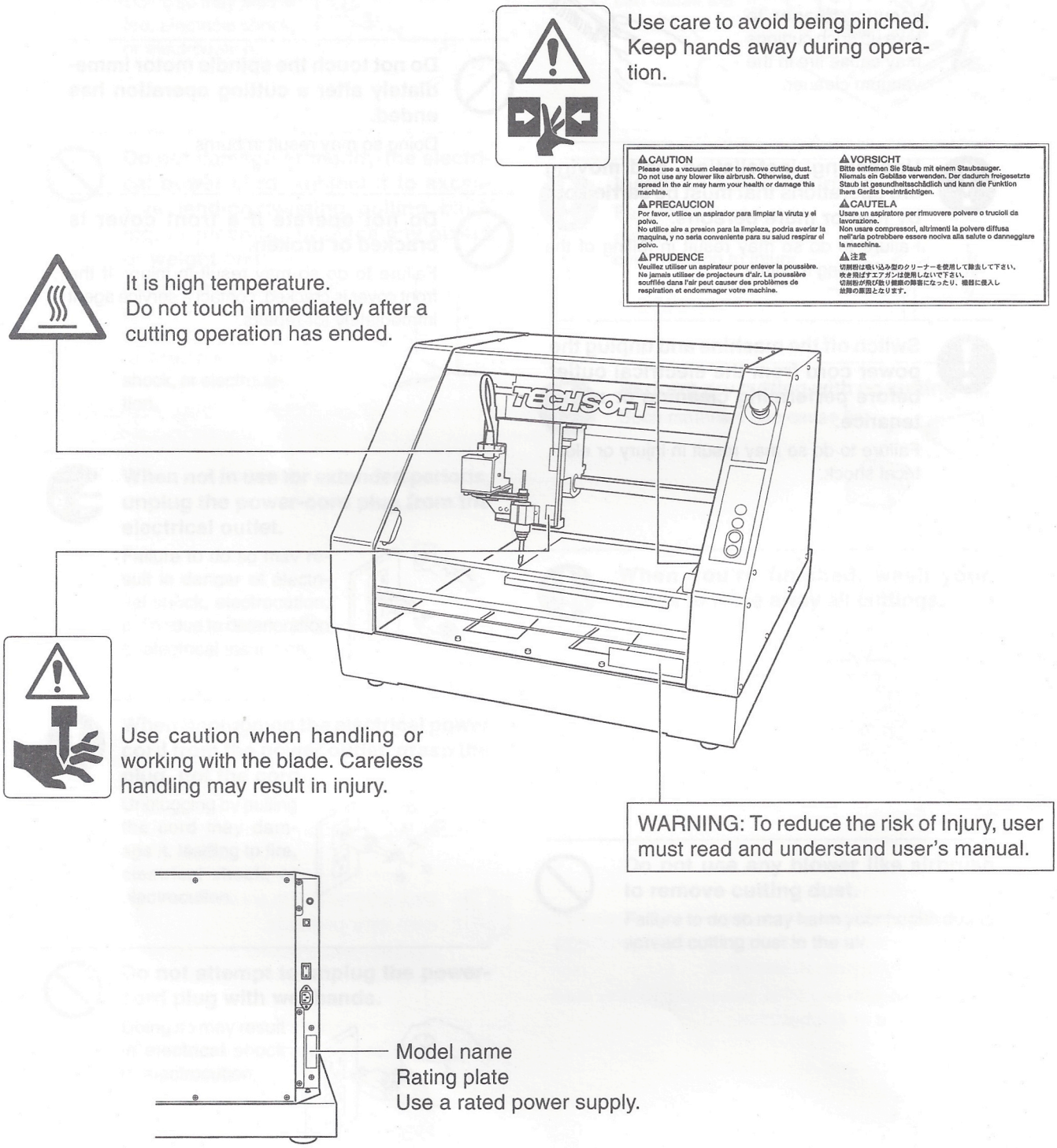

In addition to these symbols, the symbols shown below are also used.

Notice : Indicates information to prevent machine breakdown or malfunction and ensure correct use.

Point : Indicates a handy tip or advice regarding use.

1. Getting Started

This section describes what to do when you first open the packing carton, including installing the machine and connecting the power cord.

1-1 Included Items

The following items are packed together with the unit. Make sure they are all present and accounted for.

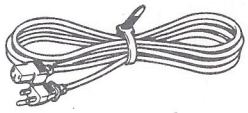

Power cord : 1

Collet : 1 (*1)

Wrenches
(17 mm:1, 10 mm:1)

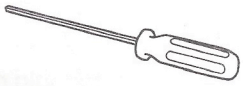

Hexagonal screw driver
(2 mm) : 1

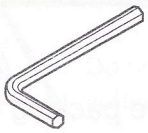

Hexagonal wrench
(2.5 mm) : 1

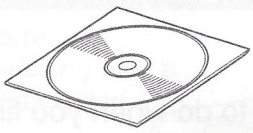

CD-ROMs : 2

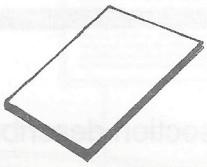

Manuals : 2

*1 This is for diameter 4.36 mm character cutters.
* This machine does not come with a cutter and cutter holder.

1-2 Parts Names

Front

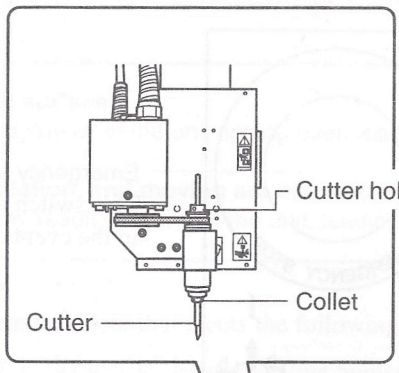

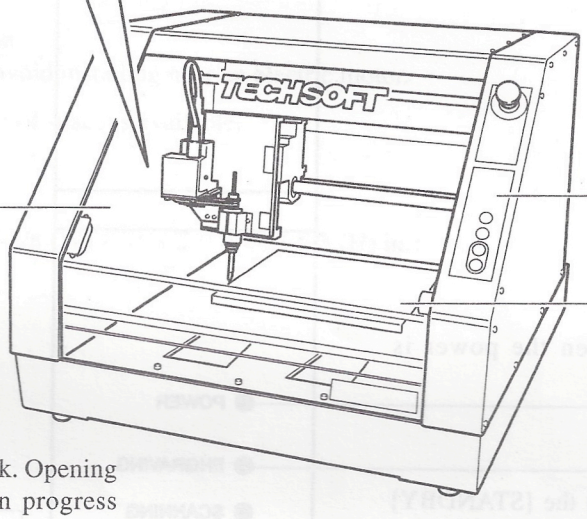

Front cover
This cover is equipped with an interlock. Opening the front cover while engraving is in progress causes the engraving to stop.

Side

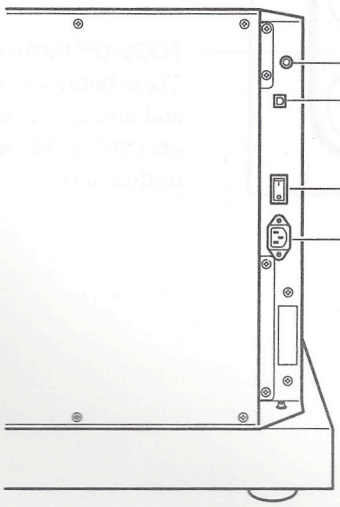

Spindle controller connector

USB connector

Power switch
This is the main power switch of the machine. When the power is switched on, the POWER light comes on.

Power-cord connector

Operation Panel

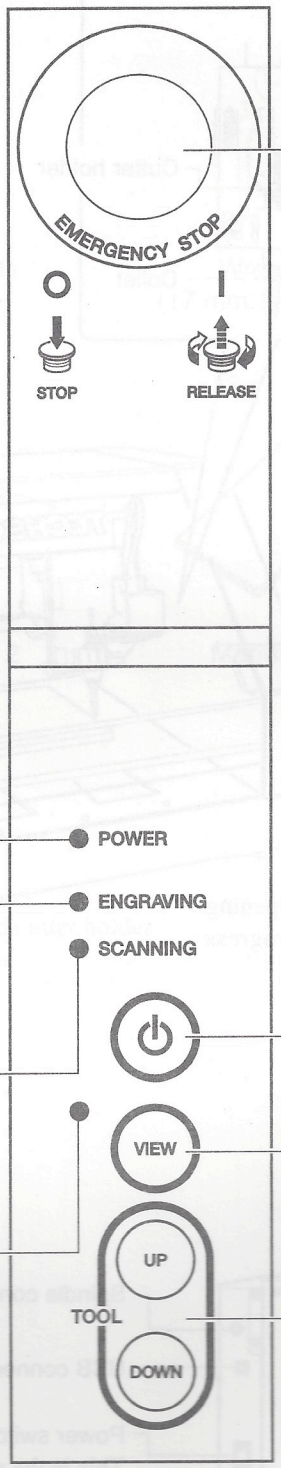

Emergency stop switch
This switch is used to stop the machine in the event of an emergency.

POWER light
This lights up when the power is switched on.

ENGRAVING light
This lights up when the [STANDBY] button is pressed while the power is switched on.

SCANNING light (optional)
This lights up when the [STANDBY] button is pressed while using the optional scanning unit.

VIEW light
This lights up when the machine is paused. During lights up, the machine doesn't operate.

STANDBY button
Pressing this button while the power is switched on makes the machine starts up, and perform initialization.

VIEW button
This pauses the machine.

TOOL-UP button/TOOL-DOWN button
These buttons move the spindle head up and down. Pressing one of the buttons once moves the spindle head about 0.05 millimeters.

1-3 Installation and Connection

Installation Site and Operating Environment

Install on a stable surface.
Failure to do so may result in the unit tipping over, leading to injury.

Unpacking, installation, and moving are operations that must be carried out by four or more persons.
Failure to do so may result in falling of the unit, leading to injury.

Use this machine in an environment that meets the following conditions.

- Temperature of 5 to 40 °C (41 to 104 °F) and relative humidity of 35 to 80% (with no condensation).
- A level location with no wobble.
- Little dust.
- Little vibration.
- Good ventilation and heat dissipation.
- Low electrical noise. For example, avoid installing near an electric motor.

Also ensure that the following amount of space is available.

Installation space

700 (W) x 800 (D) x 600 (H) mm (27-5/8 (W) x 31-1/2 (D) x 23-5/8 (H) in.)

Open the Carton Box and Detach the Retainers

The retainers shown below is attached to this machine when it is shipped from the factory. When you have finished installing the machine, detach the retainers.

1 Remove the screw shown in the figure, then detach these retainers.

2 After detaching these retainers, mount the screw at its original location on the machine.

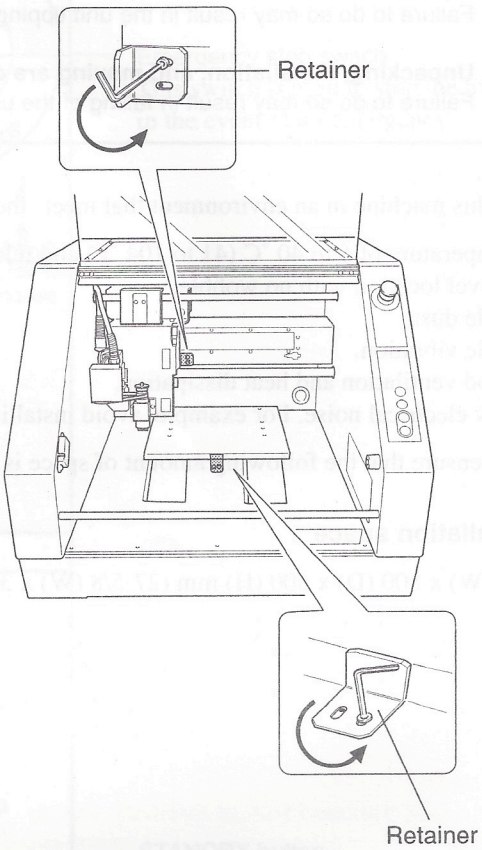

Connecting the Power Cord

Ground the unit with the ground wire.
Failure to do so may result in risk of electrocution in the event of a mechanical problem.

Use only with the power cord included with this product.
Use with other than the included power cord may lead to fire or electrocution.

Do not use with any electrical power supply that does not meet the ratings displayed on the unit.
Use with any other power supply may lead to fire or electrocution.

Notice

Make sure the power to the machine is switched off before attempting to connect or disconnect the cables. Connect securely to ensure that accidental disconnection does not occur during operation.

Connecting the Power Cord

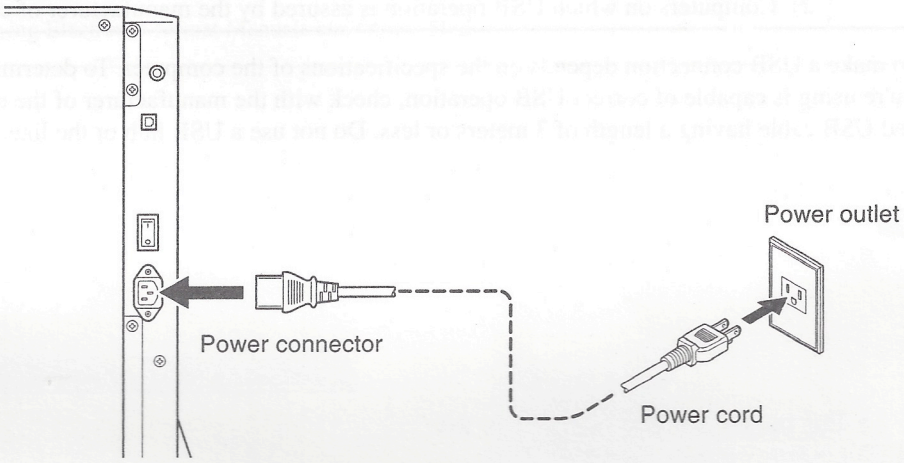

Notice

Do not connect the USB cable yet.

You connect the USB cable when you install and set up the software.

☞ See "1-5 Installing and Setting Up to the Software."

1-4 System Requirements

System Requirements for Installing the Software

Operating system	Windows 98/Me/2000/XP
Computer	Computer running Windows (Pentium processor or better recommended)
Drive	CD-ROM drive
Monitor	Windows-compatible monitor capable of displaying 256 colors or more
Memory (RAM)	32 MB or more recommended
Free hard-disk space required for installation	32 MB
Interface	USB port

System Requirements for USB Connection

Operating system	Windows 98/Me/2000/XP (Windows 95 and Windows NT4.0 are not supported.)
Computer	1) Computers preinstalled with Windows 98/Me/2000/XP at the time of purchase (This includes such computers later upgraded to Windows Me/2000/XP.) 2) Computers on which USB operation is assured by the manufacturer of computers

- The ability to make a USB connection depends on the specifications of the computer. To determine whether the computer you're using is capable of correct USB operation, check with the manufacturer of the computer.
- Use a shielded USB cable having a length of 3 meters or less. Do not use a USB hub or the like.

1-5 Installing and Setting Up to the Software

Software Included with the Machine

MODELA Player	This program is for free cutting three-dimensional shapes. You can not perform designing using this program alone. MODELA 3D Design and MODELA 3D Text are included.
Dr.Engrave	This program is for flat engraving of nameplates and the like. It can use any TrueType fonts registered with Windows. It also comes with its own stroke fonts. You can even import images and engrave items such as logos. There is even a feature that lets you import data from a list of names and engrave nameplates one after another.
3D Engrave	This program is for designing and engraving reliefs (raised engravings). This lets you easily add thickness to text, shapes, and imported images, and create three-dimensional reliefs.
Virtual MODELA	This program is for performing simulations before you actually carry out cutting using 3D Engrave or MODELA Player. It lets you verify the finished results for shapes, the time required for cutting, and other factors. This can help reduce loss in terms of material and time.
Windows driver	This is a Windows-based driver required for sending data from a computer to the machine. Be sure to install it when you are using any of the programs just described.

Point

Information on how to use the included software is found in the electronic-format manual and online help for each program.

☞ See "1-7 Viewing Electronic-format Manuals and Online Help."

Windows XP

Notice

Keep the printer and the computer unconnected until you carry out this installation operation. Failure to follow the correct procedure may make installation impossible.

☞ See "1-5 Installing and Setting Up to the Software -- What to Do If Installation Is Impossible."

Connecting a USB Cable

1. Before you start installation and setup, make sure the USB cable is not connected.

2. Log on to Windows as "Administrators" account.

3. Insert the Roland Software Package CD-ROM into the CD-ROM drive.

   The setup menu appears automatically.

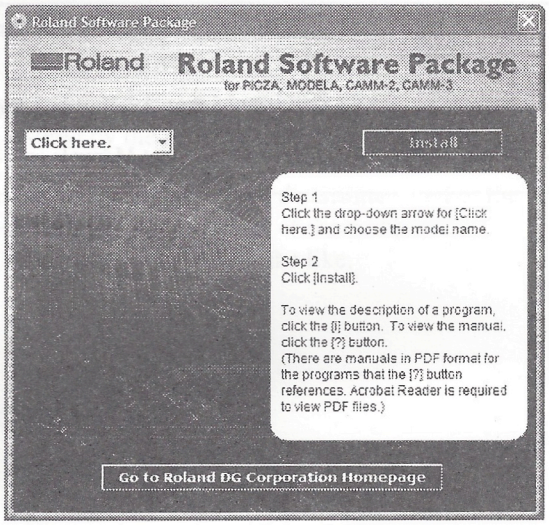

4. Switch on the power switch, and press the [STANDBY] button on the operation panel.

   The machine starts up, and initialization is performed.

5. Connect the machine using a USB cable.

   The [Found New Hardware Wizard] appears.

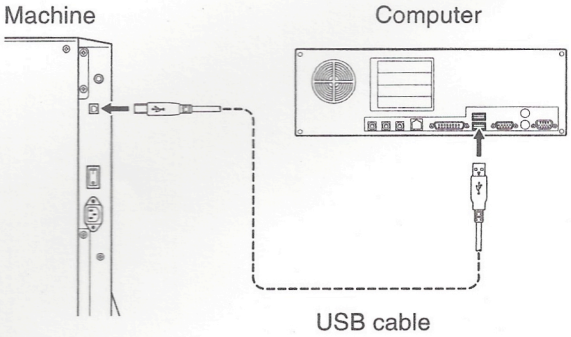

6 Choose [Install the software automatically (Recommended)], then click [Next].

Installation of the USB driver starts automatically.

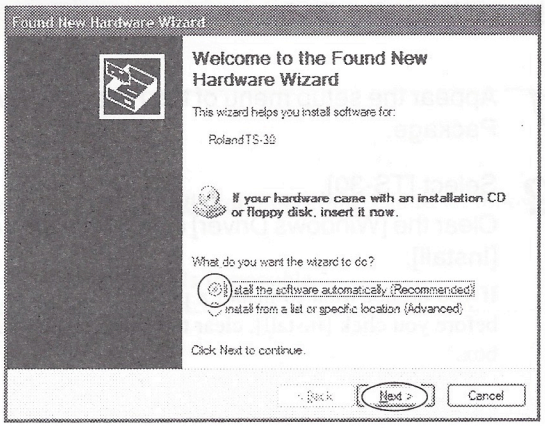

7 When the screen appears, click [Continue Anyway].

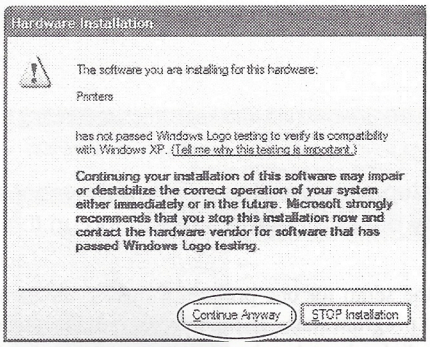

8 Click [Finish].

This completes the installation.

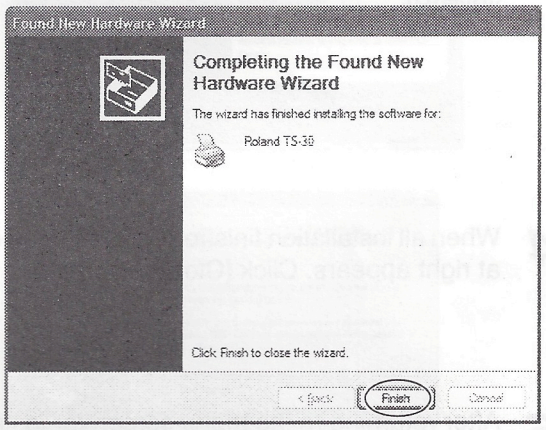

Installing the Software

1 Appear the setup menu of the Roland Software Package.

2 Select [TS-30].

Clear the [Windows Driver] check box, then click [Install].

If you do not want to install a particular program, than before you click [Install], clear the corresponding check box.

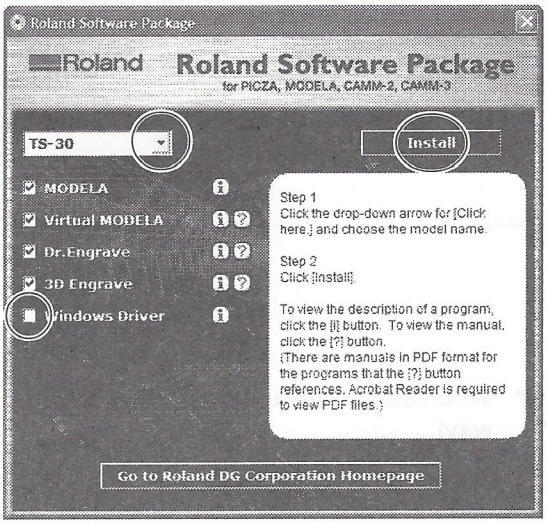

3 The setup program starts. Follow the messages to carry out setup and finish setting up the program.

When the setup for one program finishes, the setup for the next program starts. In the interval unit the next setup starts, a dialog box showing the progress of processing is displayed.

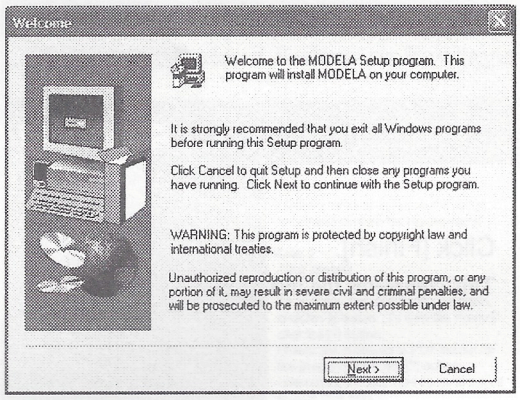

4 When all installation finishes, the screen shown at right appears. Click [Close].

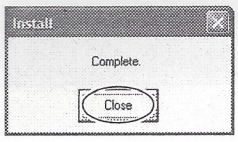

5 After returning to the menu screen for installation, click [×].

6 Remove the CD-ROM from the CD-ROM drive.

Windows 98/Me/2000

Notice

Keep the printer and the computer unconnected until you carry out this installation operation. Failure to follow the correct procedure may make installation impossible.

☞ See "1-5 Installing and Setting Up to the Software -- What to Do If Installation Is Impossible."

1 Before you start installation and setup, make sure the USB cable is not connected.

2 Log on to Windows. If you are installing under Windows 2000, log on as "Administrators" account.

3 Insert the Roland Software Package CD-ROM into the CD-ROM drive.

The setup menu appears automatically.

4 Choose [TS-30], then click [Install].

If there are programs you don't want to install, then clear their check boxes before you click [Install].

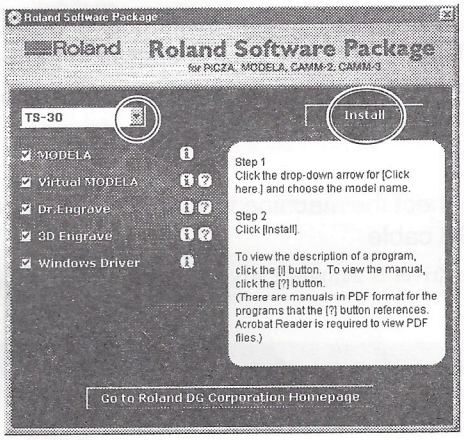

5 The setup program starts. Follow the messages to carry out setup and finish setting up the program.

When the setup for one program finishes, the setup for the next program starts. In the interval until the next setup starts, a dialog box showing the progress of processing is displayed.

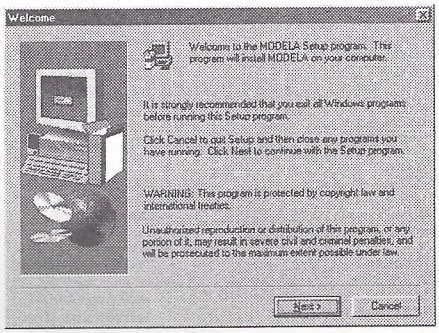

6 Next, install the driver.

Select [Install]. From [Port] box, select [USB], then click [Start].

Installation of the driver starts.

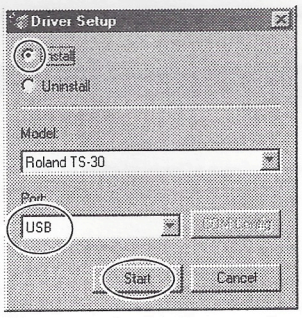

7 When all installation finishes, the screen shown at right appears. Click [Close].

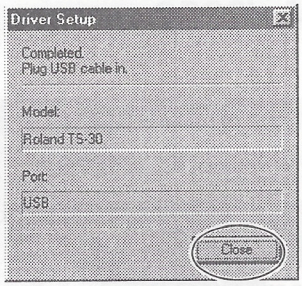

8 When the setup menu for installation reappears, click [×].

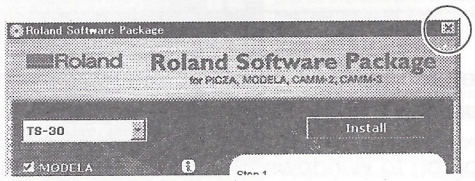

9 Remove the CD-ROM from the CD-ROM drive.

10 Switch on the power switch, and press the [STANDBY] button on the operation panel.

The machine starts up, and initialization is performed.

11 Connect the machine to your computer using a USB cable.

The driver is automatically registered in your computer.

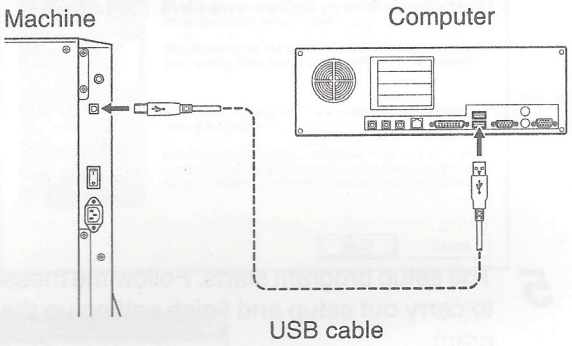

What to Do If Installation Is Impossible

If installation quits partway through, or if the wizard does not appear when you make the connection with a USB cable, take action as follows.

Windows XP/2000

1 If the [Found New Hardware Wizard] appears, click [Finish] to close it.

2 **For Windows XP**

Click the [Start] menu, then right-click [My Computer]. Click [Properties].

For Windows 2000

Right-click [My Computer] on the desktop. Click [Properties].

3 Click the [Hardware] tab, then click [Device Manager].

The [Device Manager] appears.

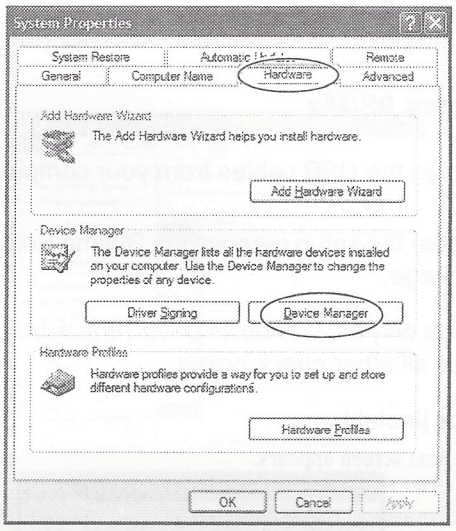

4 At the [View] menu, click [Show hidden devices].

5 In the list, find [Printers] or [Other device], then double-click it.

When [Roland TS-30] or [Unknown device] appears below the item you selected, click it to choose it.

6 Go to the [Action] menu, and click [Uninstall].

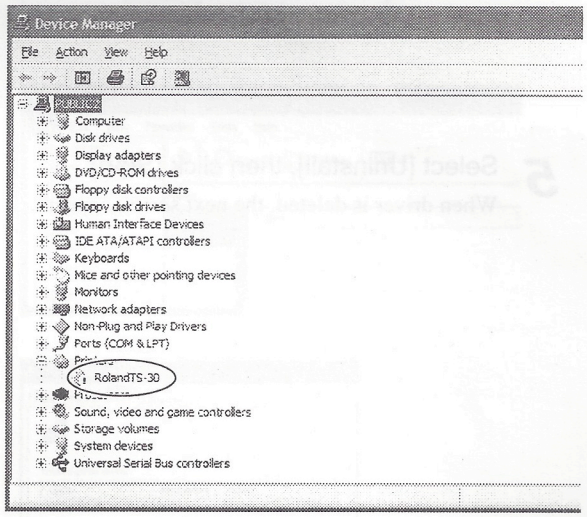

7 The screen shown at right appears.

Click [OK].

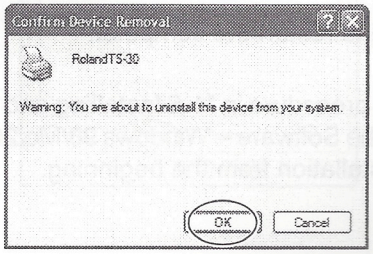

8 Close the [Device Manager] and click [OK].

9 Detach the USB cable connected to the printer.

10 Restart Windows.

11 Follow the procedure in "1-5 Installing and Setting Up to the Software -- Windows XP or Windows 98/Me/2000" to redo installation from the beginning.

Windows 98/Me

1 Unplug the USB cables from your computer.

2 Appear the setup menu of the Roland Software Package.

3 Select only the [Windows Driver] check box, and clear all other check boxes.

4 Click [Install].

The next screen appears.

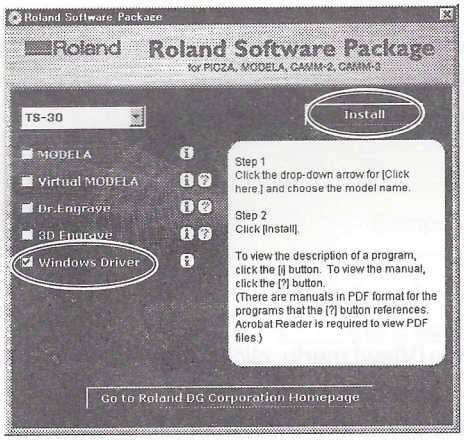

5 Select [Uninstall], then click [Start].

When driver is deleted, the next screen appears.

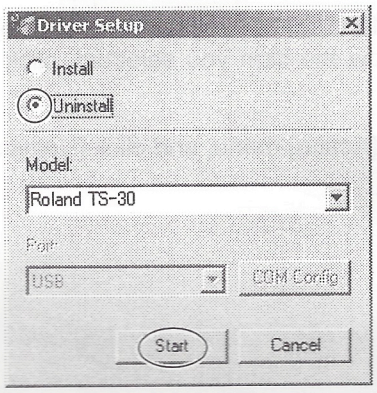

6 Click [Yes] to restart the computer.

7 Follow the procedure in "1-5 Installing and Setting Up to the Software -- Windows 98/Me/2000" to redo installation from the beginning.

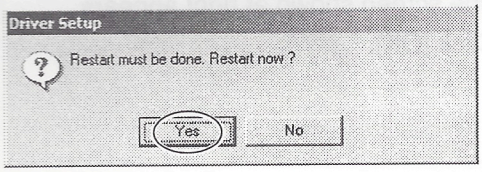

1-6 Uninstalling the Driver

Windows XP

When uninstalling the driver, perform following operation.

1. Before you start uninstallation of the driver, unplug the USB cables from your computer.

2. Log on to Windows as "Administrators" account.

3. From the [Start] menu, click [Control Panel]. Click [Printers and Other Hardware], then click [Printers and Faxes].

4. Click the [Roland TS-30] icon.
   From the [File] menu, choose [Delete].

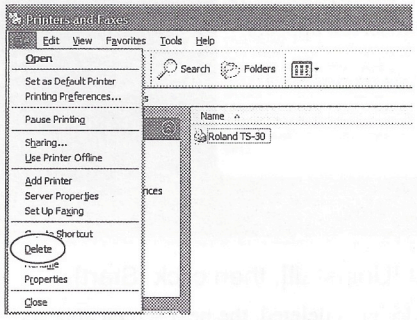

5. When the screen prompting you to confirm deleting appears, click [Yes].

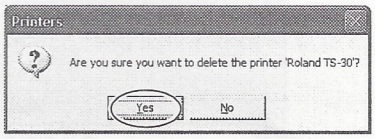

6. From [File] menu, click [Server Properties].
   The next screen appears.

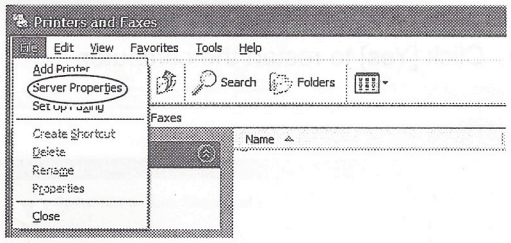

7. Click the [Drivers] tab. Choose [Roland TS-30] from the list, then click [Remove].

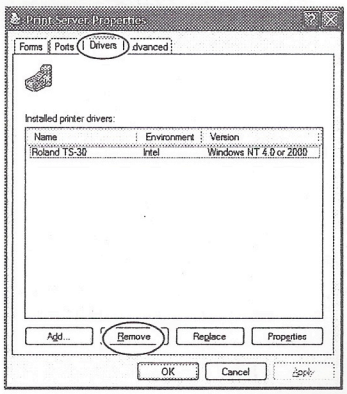

8 When the screen prompting you to confirm deleting appears, click [Yes].

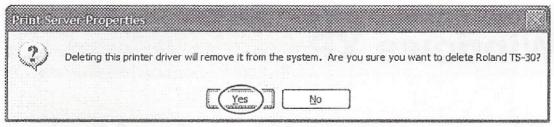

9 Insert the Roland Software Package CD-ROM into the CD-ROM drive.

The setup menu appears automatically.

10 At the setup menu, select only the [Windows Driver] check box, and clear all other check boxes.

11 Click [Install].

The next screen appears.

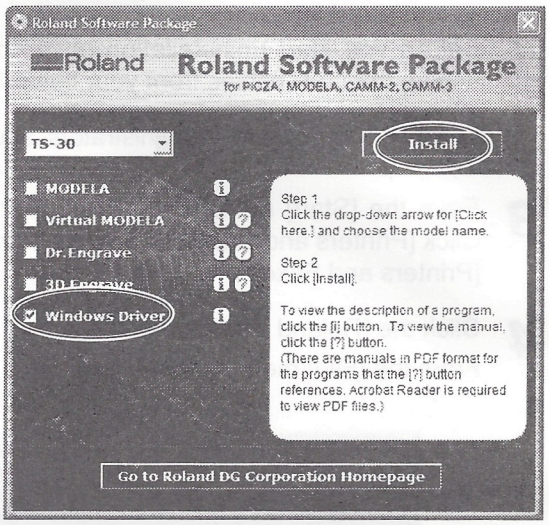

12 Select [Uninstall], then click [Start].

When driver is deleted, the next screen appears.

13 Click [Yes] to restart the computer.

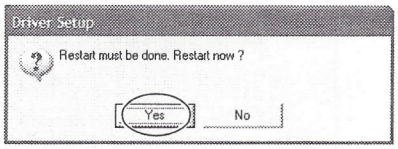

Windows 98/Me/2000

When uninstalling the driver, perform following operation.

1. Before you start uninstallation of the driver, unplug the USB cables from your computer.

2. Log on to Windows. If you are installing under Windows 2000, log on as "Administrators" account.

3. Insert the Roland Software Package CD-ROM into the CD-ROM drive.

   The setup menu appears automatically.

4. At the setup menu, select only the [Windows Driver] check box, and clear all other check boxes.

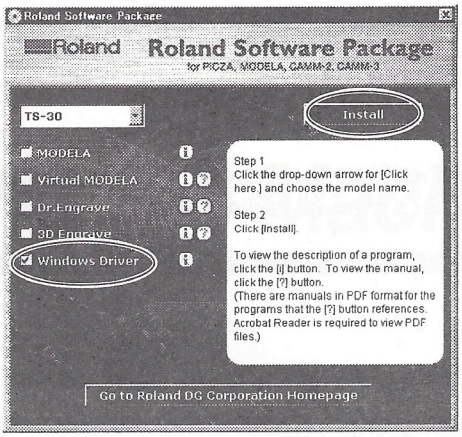

5. Click [Install].

   The next screen appears.

6. Select [Uninstall], then click [Start].

   When driver is deleted, the next screen appears.

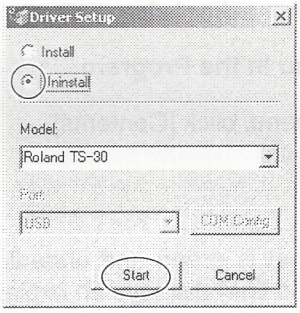

7. Click [Yes] to restart the computer.

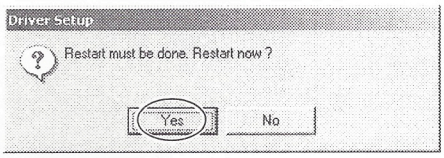

1-7 Viewing Electronic-format Manuals and Online Help

For information on how to use the included programs and drivers, refer to the manuals in electronic format or the online help.

Viewing Manuals in Electronic Format

1. Insert the Roland Software Package CD-ROM into the CD-ROM drive.

   The setup menu appears automatically.

2. Choose [TS-30].

3. Click the [?] button. Acrobat Reader starts and the user's manual is displayed.

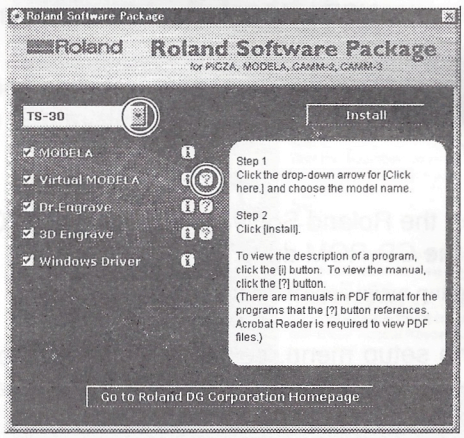

Viewing Online Help

There are three ways to view online help.

Clicking the Help Menu in the Program

1. From the [Help] menu, click [Contents].

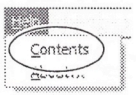

2. Clicking on text that is green and underlined (by a solid or dotted line) displays an explanation.

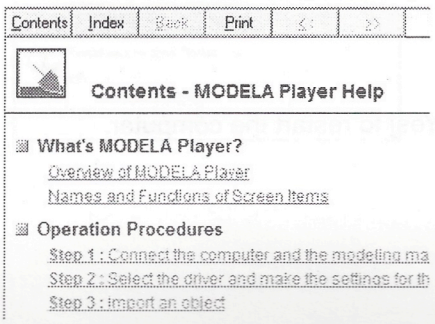

Clicking the [?] Button in the Window

Clicking [?] in the upper-right corner of the window makes the mouse pointer change to a question mark ( ). You can then move the pointer over any item you wish to learn more about, then click on the item to display an explanation of it.

Clicking the [Help] Button in the Window

Clicking [Help] lets you view help for the window or software.

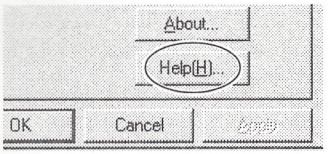

2. Operating the Machine

This chapter describes the operation of the machine up to the point of starting engraving, including how to switch the machine on and off and how to install a cutting tool.

2-1 Starting the Machine

To starting the machine, follow the steps described below.

1 Make sure the front cover is closed.

2 Switch on the power switch.

The POWER light comes on.

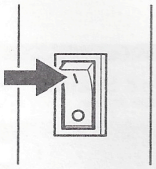

3 Press the [STANDBY] button.

The ENGRAVING light comes on. The machine starts up, and initialization is performed.
After initialization ends, the VIEW light comes on and the machine is paused.

4 Press the [VIEW] button.

The view state is canceled, and the machine finishes preparations for receiving cutting data.

Switching Off the Power

Switch off the power switch.
The POWER light goes dark and the power to the machine is switched off.

2-2 Emergency Stop to Ensure Safety

Emergency Stop Switch

This switch stops the machine in an emergency in order to avoid danger. Pressing the emergency stop switch immediately halts operation and aborts engraving.

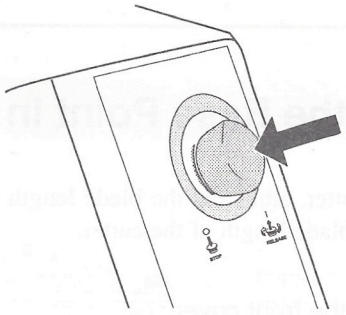

Point

Releasing the Emergency Stop Switch

Turning the switch in the direction of the arrow releases the emergency stop switch.

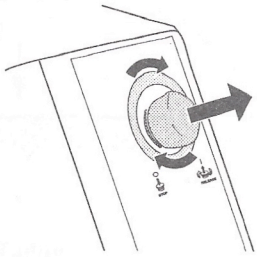

Front Cover

Opening the front cover during operation interrupts engraving, and the ENGRAVING and VIEW lights flash. To recover from this, close the front cover, and press the [STANDBY] button to clear the error.
It is possible to open the front cover while the machine is paused. To pause the machine, refer to " 2-5 Stopping and Pausing Engraving." When you open the front cover, the VIEW light flashes every two seconds. Closing the front cover stops the flashing.

2-3 Installing the Cutter

Make sure the power to the machine is switched off before installing the cutter holder or collet.

Setting the Base Point in the Depth Direction

Install the cutter, adjusting the blade length to match the thickness of the material. When you change the other one, readjust the blade length of the cutter.

1 Open the front cover.

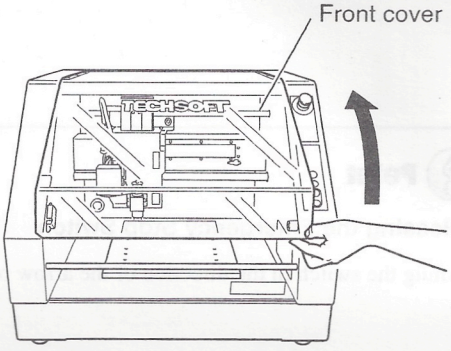

2 While using the wrench (17 mm) to keep the spindle immobile, tighten a cutter holder securely.

> **Point**
>
> A cutter holder is reverse-threaded (that is, you turn it counterclockwise to tighten it). Be careful to turn it in the correct direction.

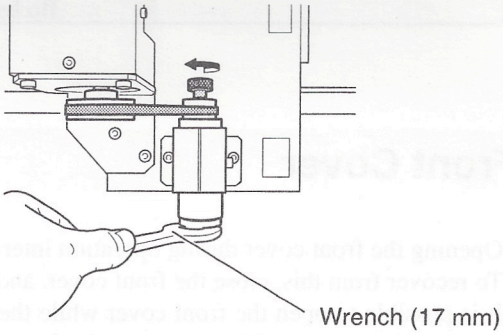

3 Insert the collet from below.

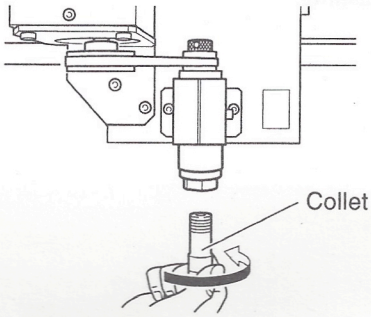

4 Use the wrenches (17 mm and 10 mm) to tighten the collet.

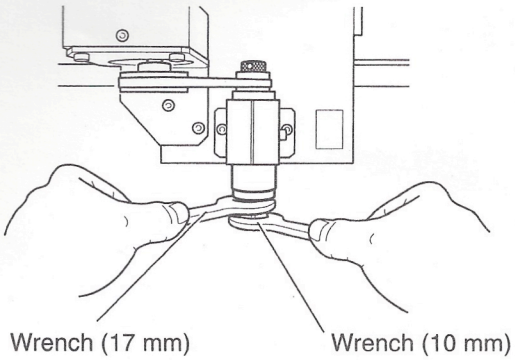

5 Switch on the power switch, and press the [STANDBY] button on the operation panel.

Initialization is performed, and the VIEW light comes on.

6 Press the [VIEW] button.

The view state is canceled.

7 Press the [TOOL-DOWN] button to lower the spindle head and bring the tip of the collet close to the surface of the material.

The height of the spindle head at this time is set as the depth-direction base point.

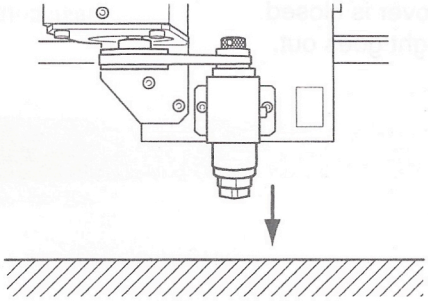

8 Insert a cutter into the spindle, making the tip of the cutter touch the surface of the material.

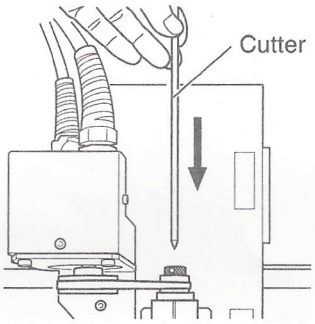

9 Use the hexagonal screw driver to tighten the screw.

> **Point**
>
> After you have set the depth-direction base point, do not press the [TOOL-UP] or [TOOL-DOWN] buttons. Doing so will change the location of the base point.

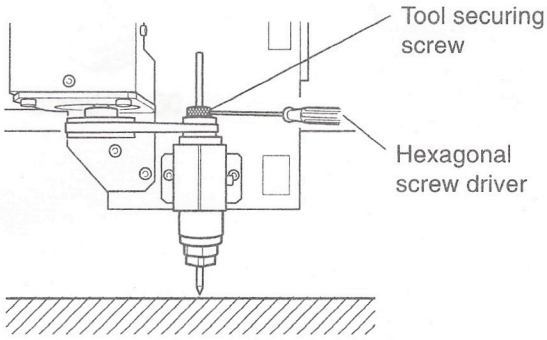

10 Close the front cover.

2-4 Starting Engraving

Perform dry cutting with no cutting oil.
Such materials can cause fire.

Do not operate if a front cover is cracked or broken.
Failure to do so may result in injury. If the front cover is cracked, contact a service agent immediately for repairs.

Engraving is started after receiving cutting data from your computer.
Before performing engraving, make sure the following two points have been carried out.

- The front cover is closed.
- The View light goes out.

2-5 Stopping and Pausing Engraving

Pausing Engraving

To Pause Engraving

Press the [VIEW] button. Pressing the [VIEW] button moves the spindle head to the left edge and the table to the front of the machine.
It is possible to open the front cover while the machine is paused. Before you open the front cover, make sure that operation has stopped completely.

To Resume Engraving

Make sure the front cover is closed, then press the [VIEW] button again.

Stopping Engraving

1 Press the [VIEW] button to pause operation.

2 Stop sending data from your computer.

For Windows XP

From the [Start] menu, click [Settings], then click [Printers]. Click [Printers and Other Hardware], then click [Printers and Faxes].

For Windows 98/Me/2000

From the [Start] menu, click [Settings], then click [Printers].

3 Double-click the [TS-30] icon.

Roland TS-30

4 **For Windows XP/2000**

At the [Printer] menu, choose [Cancel All Documents].

For Windows 98/Me

At the [Printer] menu, choose [Purge Print Documents].

5 Delete the cutting data remaining in the machine.

Press the [TOOL-UP] and [TOOL-DOWN] buttons at the same time.

The VIEW light flashes. When deletion of the data ends, the VIEW light stops flashing.

MEMO

3. Appendix

3-1 Maintenance

Daily Care

Do not use any blower like airbrush to remove cutting dust. Failure to do so may harm your health due to spread cutting dust in the air.

Cutting dust which presents danger of explosion clear away by using a commercially available brush. Attempting to use a vacuum cleaner to take up such cuttings may cause fire in the vacuum cleaner.

Switch off the machine and unplug the power cord from the electrical outlet before performing cleaning or maintenance. Failure to do so may result in injury or electrical shock.

Notice

Do not use solvents such as thinner, benzine, or alcohol to clean.

Carefully clean away cutting waste. In addition to the table, also clean the spindle head.

Cleaning the Main Unit

When the main unit becomes dirty, use a dry cloth to wipe it.

Cleaning the Table and Around the Spindle Head

After cutting has finished, turn off the power to the main unit.
Use a vacuum cleaner or brush to clean the buildup of cuttings around the spindle head.

3-2 What to Do If

Responding to an Error Flashing

If the lights on the operation panel are flashing as shown below, then an error has occurred on the machine. To correct the error, follow the steps described below.

The ENGRAVING and SCANNING lights flash every 0.2 second.

An error occurred during initialization of the machine.
Switch the power off, then back on.
If the error is not cleared when you switch the power on again, the machine may be malfunctioning. Contact your authorized Roland DG Corp. dealer or service center.

The ENGRAVING and VIEW lights flash every second.

The front cover was opened while an engraving operation was in progress.
Close the front cover and press the [STANDBY] button to clear the error.

The ENGRAVING light flashes every 0.2 second.

The spindle motor doesn't operate correctly.
Switch the power off, then back on.
If the error is not cleared when you switch the power on again, the machine may be malfunctioning. Contact your authorized Roland DG Corp. dealer or service center.

3-3 Specifications

Main Unit Specification

		TS-30
Table size		305 (W) x 305 (D) mm (12 (W) x 12 (D) in.)
Axis travels		305 (X) x 305 (Y) x 105 (Z) mm (12 (X) x 12 (Y) x 4-1/8 (Z) in.)
Loadable workpiece thickness		Maximum 125 mm (4-15/16 in.)
XYZ-axis motor		Stepping motor
Feed rate		XY-axis: 0.1 to 30 mm/s (0.0039 to 1.1 in./s) Z-axis: 0.1 to 15 mm/s (0.0039 to 0.59 in./s)
Software resolution		0.01 mm/step (0.00039 in./step)
Mechanical resolution		0.002 mm/step (0.00008 in./step)
Spindle motor		DC brushless motor, Maximum 72 W
Spindle speed		3,000 to 10,000 rpm
Tool chuck		Cutter holder (4.36 mm) and collet
Interface		USB connector, and Spindle controller connector
Power supply	Voltage and frequency	AC 100 - 240 V ± 10 %, 50/60 Hz
	Required power capacity	1.5 A
Power consumption		Approx. 150 W
Acoustic noise level		No-load operation : 55 dB (A) or less standby : 40 dB (A) or less (According to ISO 7779)
Dimensions		669 (W) x 760 (D) x 554 (H) mm (26-3/8 (W) x 29-15/16 (D) x 21-13/16 (H) in.)
Weight		62 kg (137 lb.)
Packed dimensions		785 (W) x 885 (D) x 735 (H) mm (31 (W) x 35 (D) x 29 (H) in.)
Packed weight		69 kg (153 lb.)
Operating environment		Temperature: 5 to 40°C (41 to 104°F) humidity: 35 to 80 % (no condensation)
Accessories		Power cord, collet, wrenches (17 mm, 10 mm), hexagonal screw driver, hexagonal wrench, CD-ROMs, manuals

Spindle Controller Specification

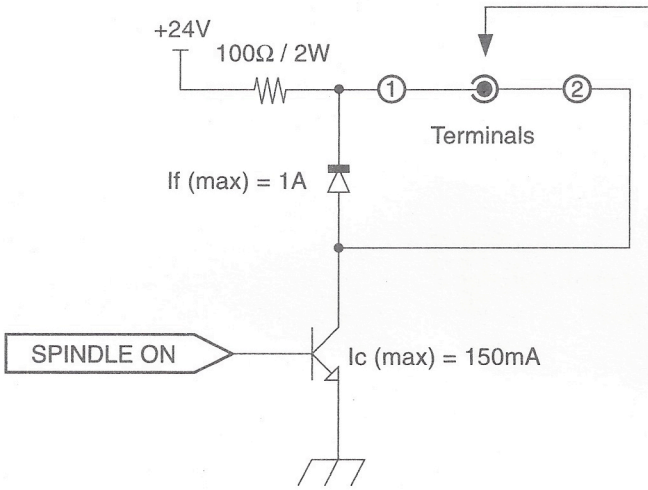

Compatible plug

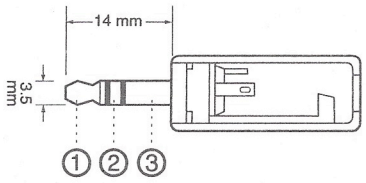

Use only a triple-contact plug of the size described above.

Notice

Do not use terminal ③. Use only terminals ① and ②.

This circuit is activated when the spindle motor is in operation.

Notice

- Use within the rated range shown above.
- Do not apply voltage greater than 24 V to the terminal.
- Do not short the terminal to ground.

No responsible is assumed for effects to which any equipment connected to this external output connector is subjected.